PCBPIC-1

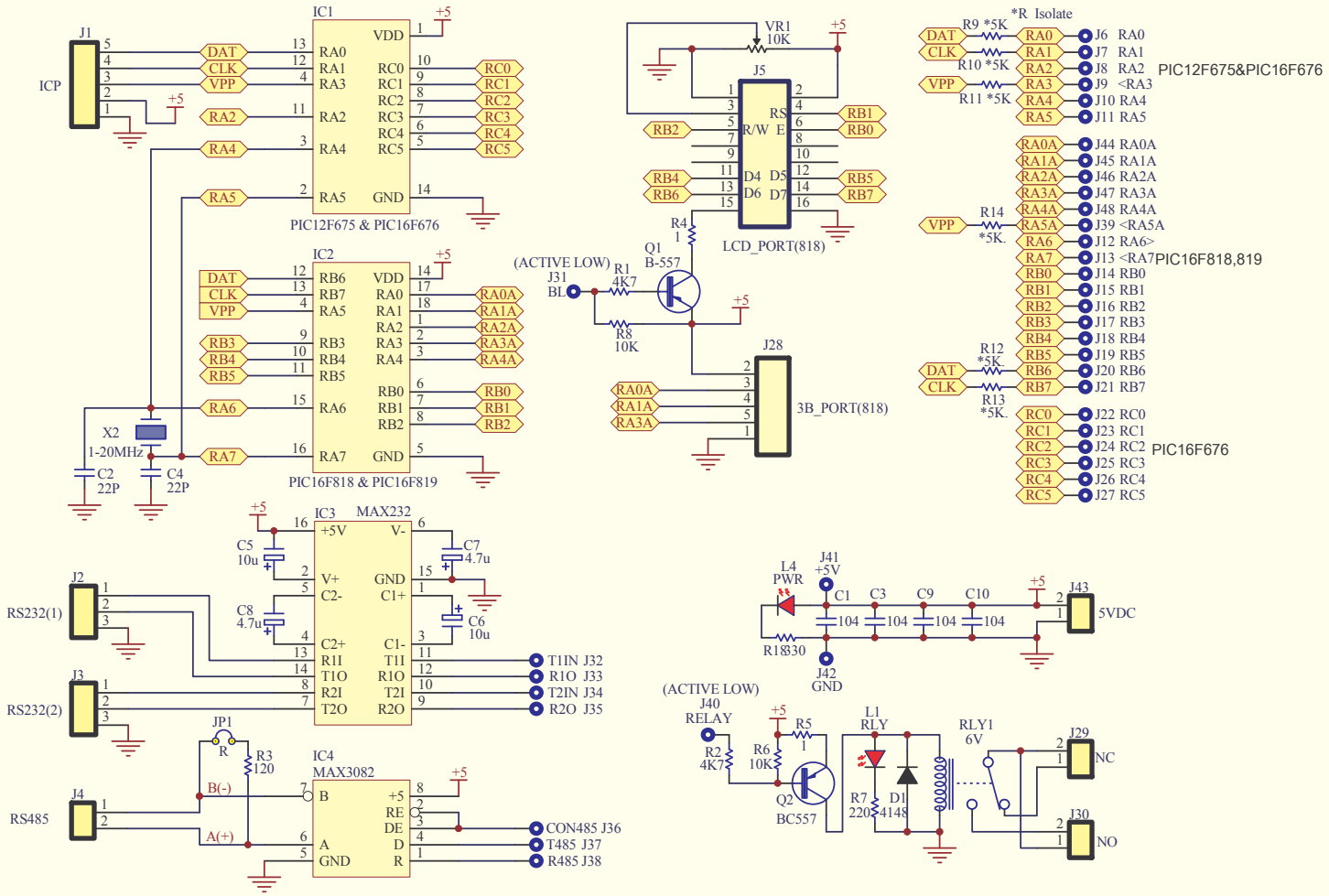
IC1
PIC12F675 & PIC16F676
IC2
PIC16F818 & PIC16F819
IC3 MAX232
IC4 MAX3082
J1 ICP
J2 RS232(1)
J3 RS232(2)
J4 RS485
X2 1-20MHz
C2 22P
C4 22P
C5 10u
C6 10u
C7 4.7u
C8 4.7u
JP1
R3 120
T1IN J32
R1O J33
T2IN J34
R2O J35
CON485 J36
T485 J37
R485 J38
VR1 10K
J5 LCD_PORT(818)
R4 1
Q1 B-557
(ACTIVE LOW) J31 BL
R1 4K7
R8 10K
J28 3B_PORT(818)
*R Isolate
R9 *5K
R10 *5K
R11 *5K
R14 *5K.
R12 *5K
R13 *5K.
J6 RA0
J7 RA1
J8 RA2
J9 <RA3
J10 RA4
J11 RA5
PIC12F675&PIC16F676
J44 RA0A
J45 RA1A
J46 RA2A
J47 RA3A
J48 RA4A
J39 <RA5A
J12 RA6>
J13 <RA7
PIC16F818,819
J14 RB0
J15 RB1
J16 RB2
J17 RB3
J18 RB4
J19 RB5
J20 RB6
J21 RB7
J22 RC0
J23 RC1
J24 RC2
J25 RC3
J26 RC4
J27 RC5
PIC16F676
L4 PWR
J41 +5V
C1 104
C3 104
C9 104
C10 104
R18 330
J42 GND
J43 5VDC
(ACTIVE LOW) J40 RELAY
R2 4K7
R6 10K
R5 1
Q2 BC557
L1 RLY
R7 220
D1 4148
RLY1 6V
J29 NC
J30 NO